PROPORTION-AIR

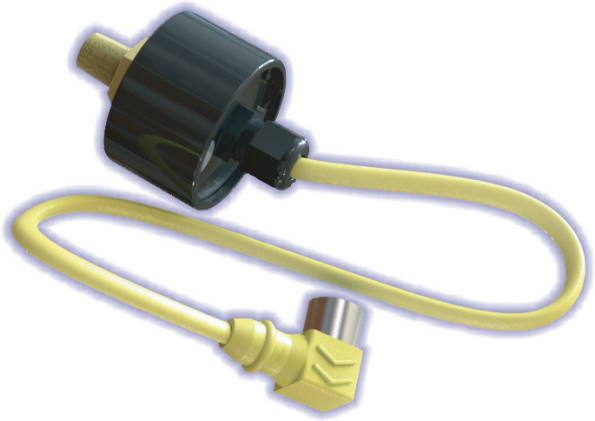

DSB

DSL

DS SERIES PRESSURE TRANSDUCERS

Accurately measure the pressure of gases or fluids

Dual-Loop or Stand-Alone Transducers

DST

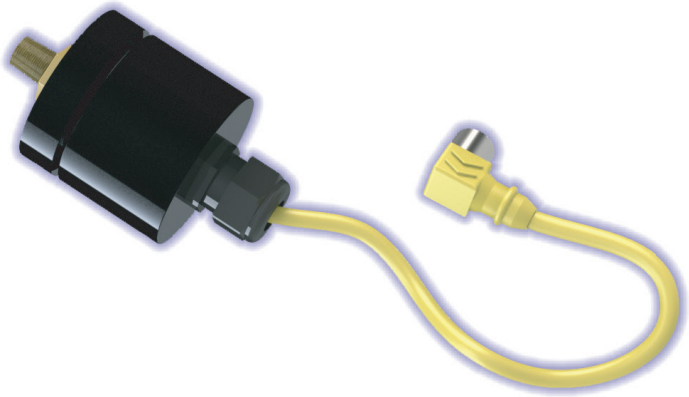

DSW

DS Overview

DS series pressure transducers accurately measure pressure of gases or fluids. The output is an electrical signal based on the measurement.

Conditioning of the electrical signal from the strain gauge sensor gives either 0-10 VDC or 4-20 mA output depending on the model ordered (consult factory for other available outputs). The electrical output is a linear ratio of the pressure sensed. DS series transducers are enclosed in a rugged aluminum housing. A strain relief protects the wiring from damage caused by excessive pulling force.

The standard version (DSB) measures pressure using a piezo-resistive semiconductor sensor chip.

The stainless steel version (DST) uses the same silicon-etched device as the DSB mounted on a stainless steel diaphragm. On these units, no elastomers or o-rings contact the pressurized media.

The NEMA4 version (DSW series) is electrically identical to the DSB series. The DSW series is housed in a slightly larger canister that is sealed against fluid spray from any direction.

The compact package (DSL) uses a piezo-resistive strain gauge sensor housed in a miniature rugged anodized aluminum canister. The DSL has a 10-32 pneumatic connection is lightweight with high accuracy and repeatability.

Specifications

Electrical

Supply Voltage	15-24 VDC
Supply Current	35-50 mADC
Monitor Signal	0-10 VDC | 4-20 mA
Response time	100 Microseconds

Mechanical

Pressure Ranges	**DSB**: Vacuum - 175 psig
	DSL: Vacuum - 30 psig
	DST: Vacuum - 7,500 psig
	DSW: Vacuum - 175 psig (NEMA4)
Output Pressure	0-100% of range
Repeatability	±0.02% to ±0.25% F.S.
Accuracy (Pressure)	±0.2% to ±0.5% F.S.

*Please consult factory with questions.

Physical

Operating Temperature	32-158° F (0-70° C)
Weight	**DSB**: 4.8 oz. (136 kg)
	DSL: 1.6 oz. (45 kg)
	DST: 5.4 oz. (154 kg)
	DSW: 11.2 oz. (318 kg)
Materials	**DSB**: Viton, Aluminum & 360 FC Brass
	DSL: Aluminum & Buna-N
	DST: Stainless Steel & Aluminum
	DSW: Viton, Aluminum & 360 FC Brass
Cable Length	18 inches (other sizes available)
Media	Non-corrosive gases
	DST: N/C fluids & gases
Port Sizes	10-32, 1/8", 1/4"

Dimensions (inches [mm])

DSB

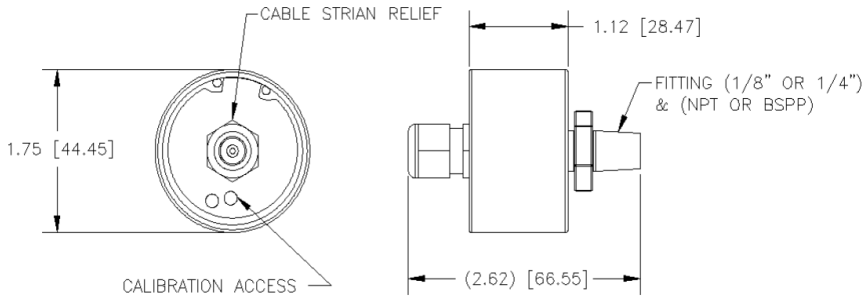

DST

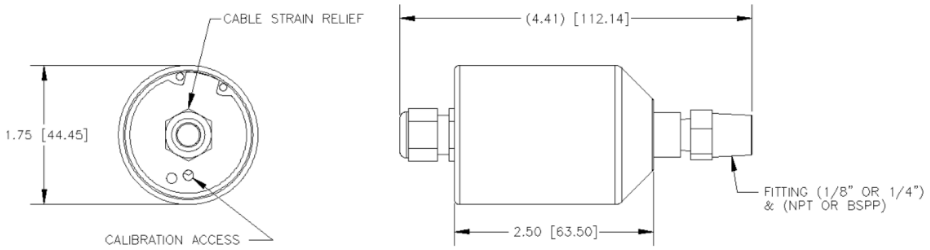

DSW

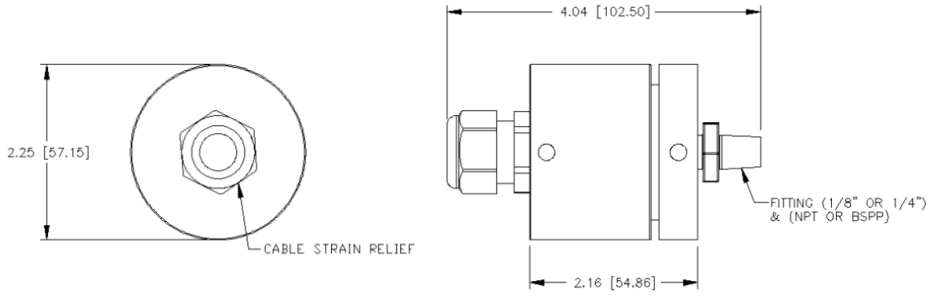

DSL

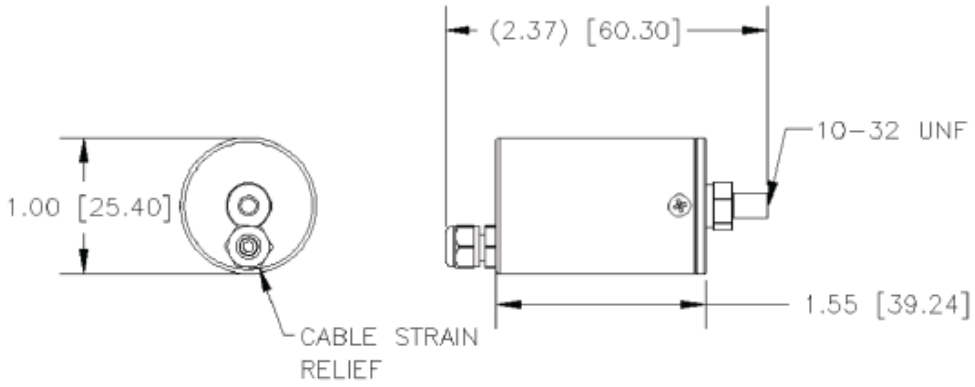

Installation

1. When installing a DS transducer to sense downstream pressure it is best to place the device directly before where air is being used. This ensures that the valve maintains the desired pressure at the point of use.

2. Ensure that pressure seen by the DS does not exceed original maximum pressure. If a change this large is needed, consult factory first. Failure to do so may result in damage to the pressure sensor.

Before you get started, please read these warnings

- Examine the product. Ensure that you received what you ordered.
- Read this guide first before you start and save it for later use.
- All compressed air and power should be shut off before installing, removing or performing maintenance on this product.
- Installation and use of this product should be under the supervision and control of properly qualified personnel in order to avoid the risk of injury or death.
- Media vents through exhaust port. The exhaust port should be vented into a safe area.

Calibration

The DSW, DSB, DST & DSL pressure transducers are factory calibrated. Should further calibration be required, please follow these procedures.

Two calibration potentiometers on the pressure transducer set the overall zero and span points. They are located on the back of the transducer recessed in two holes. These adjustments are set by the factory and covered with metallic tape. This metal tape may be removed to recalibrate the unit.[1]

If the unit needs recalibrated, it may be desirable to consult the factory about purchasing a 3-pin connector which allows easy access to the green, white, and black wires of the transducer.

Calibration Procedure

1. Remove the metal tape[1] from the transducer lid to expose screwdriver slot adjustments of the calibration potentiometers (See Figure 1).
2. Make correct electrical connection for the model of transducer being calibrated. (see "Electrical Connection" section on this document for wiring diagrams).
3. Apply the maximum desired pressure to the pressure port.
4. Turn the span adjustment to set the maximum desired electrical output signal.
5. Apply the minimum desired pressure to the pressure port. If the minimum desired pressure is zero, then use a setting equal to 10% of the maximum desired pressure.
6. Turn the zero adjustment to set the minimum desired electrical output signal. If using 10% of the maximum desired pressure, then set the minimum electrical output signal to be 10% of the maximum desired electronic output signal. (ie: 5.6mA for a 4-20mA device).
7. Repeat steps #3-#6 until accuracy specifications of the device are met.

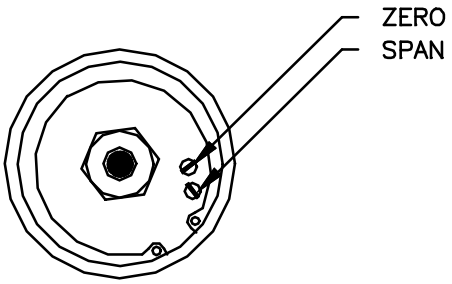

Figure 1

[1] In the DSW, you must remove the lid.

Electrical Connections

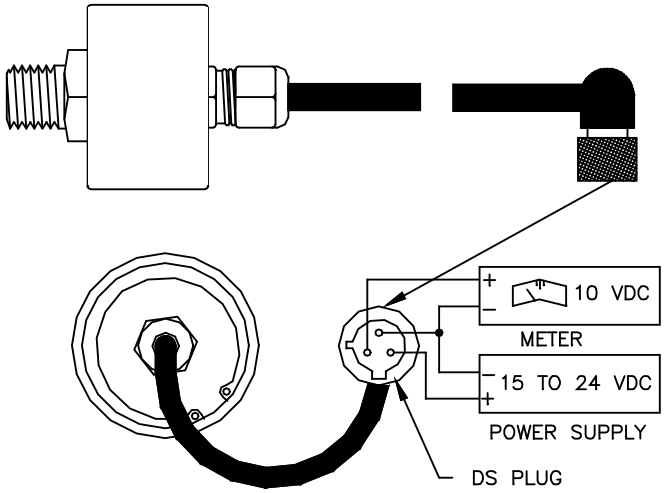

Electrical Connection*
X-

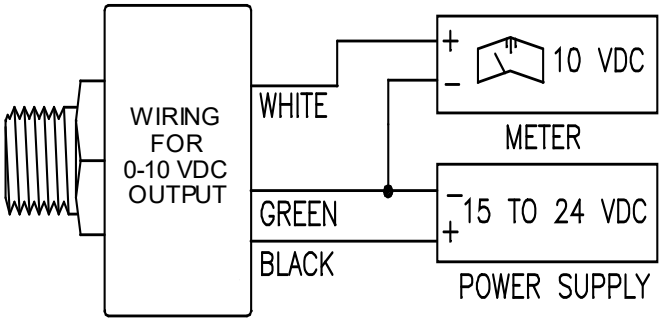

Electrical Connection*
Y- & F-

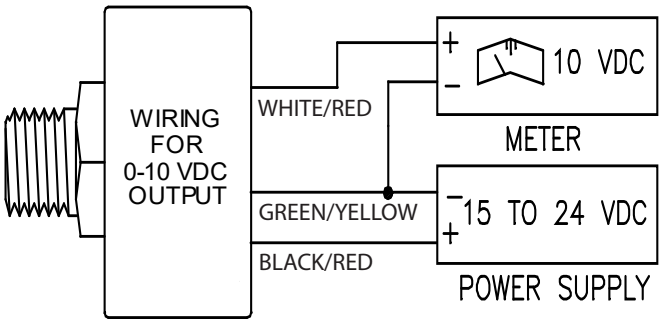

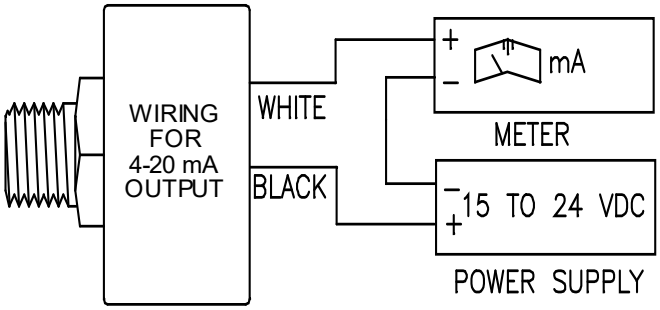

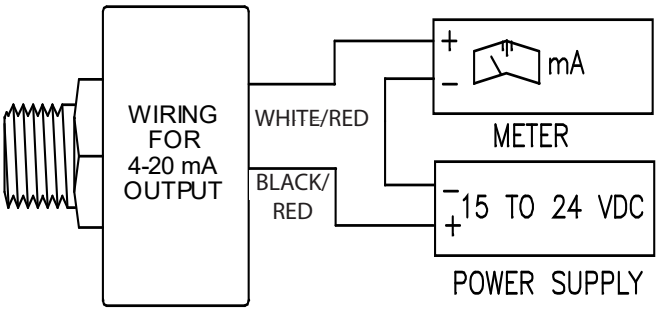

*See configuration on next page

DS

ACCURACY	±0.2% F.S.	PRESSURE	Full Vac to 7500 PSIG *(483 Bar)*
PORT SIZE	1/8" & 1/4"	PRESSURE TRANSDUCERS	

Example Part Number	DS	T	E	W00	Z		P	10	BR	G	A	O2	
Section Reference->		1	2	3	4	5	6	7	8	9	10	OPTIONS	

1	Type
B	Standard *(up to 175 psig)*
L	Compact *(up to 30 psig)*
T	Stainless Steel *(up to 7500 psig)*
W	Watertight *(up to 175 psig)*
	*Consult factory for assistance

2	Signal Type
E	0 to 10 VDC
I	4 to 20 mADC*
K	0 to 5 VDC
V	1 to 5 VDC
Z	1.9 to 9.5 VDC
	*NOT available with type **T** (stainless steel)

3	Electrical Connection		
W00	Receptacle on Can, 3-pin Male	X20	20 Foot, Cable with Flying Leads
F00	18 Inch, 3-pin Female RF	X25	25' Foot, Cable with Flying Leads
F03	3 Foot, 3-pin Female RF	Y00	18 Inch, 3-pin Female
F06	6 Foot, 3-pin Female RF	Y03	3 Foot, 3-pin Female
F12	12 Foot, 3-pin Female RF	Y06	6 Foot, 3-pin Female
X00	18 Inch, Cable with Flying Leads	Y12	12 Foot, 3-pin Female
X03	3 Foot Cable with Flying Leads	Y20	20 Foot, 3-pin Female
X06	6 Foot Cable with Flying Leads	Y25	25 Foot, 3-pin Female
X12	12 Foot Cable with Flying Leads		

4	Zero Offset
N	0% Pressure is Below Zero*
P	0% Pressure is Above Zero
Z	0% Pressure is Zero *(Typical)*
	*NOT available with type **T** (stainless steel)

5	Zero Offset Pressure
	Typical is 0* - If greater than 30% of full scale pressure *(#8 below)*, please consult factory.
	*If **Z** for Zero Offset, Please Leave this Section (#6) Blank

6	Full Scale Pressure Type
N	100% Pressure is Below Zero*
P	100% Pressure is Above Zero
Z	100% Pressure is Zero
	*NOT available with type **T** (stainless steel)

7	Full Scale Pressure
	Must be less than or equal to 7,500 psig*
	*Adder if Full Scale Pressure is <13.5" H2O

8	Pressure Unit		
PS	PSI	Inches Hg	IH
MB	Millibars	Inches H_2O	IW
BR	Bar	Millimeters H_2O	MW
KP	Kilo-pascal	Kilograms/cm^2	KG
MP	Mega-pascal	Torr *(Requires A for Unit of Measure #9)*	TR
MH	Millimeters Hg	Centimeters H_2O	CW
PA	Pascal		

9	Pressure Unit of Measure
A	Absolute Pressure
G	Gauge Pressure

10	Pneumatic Connection *(Type = Section #1)*	
A	1/4" NPT Male	Type **B, T, W** Only
B	1/8" NPT Male	Type **B, T, W** Only
C	1/4" BSPP Female	Type **T** Only
D	1/8" NPT Female	Type **T** Only
E	1/4" BSPT Male	Type **B, W** Only
F	1/8" BSPT Male	Type **T** Only
G	10-32 UNF Female	Type **L** Only

Options	
O2*	Oxygen Cleaned
O3*	Oxygen Cleaned Non-O2 Use
P1	12V Power
	*Available up to 200 psig

Many other options are available. Please consult factory for more information.

SAFETY PRECAUTIONS

Please read the following safety information before installing or operating any Proportion-Air, Inc. equipment or accessories. To confirm safety, observe 'ISO 4414: Pneumatic Fluid Power - General rules relating to systems' and other safety practices.

WARNING

Improper operation could result in serious injury or loss of life!

1. **PRODUCT COMPATIBILITY**
Proportion-Air, Inc. products and accessories are for use in industrial pneumatic applications with compressed air media. The compatibility of the equipment is the responsibility of the end user. Product performance and safety are the responsibility of the person who determined the compatibility of the system. Also, this person is responsible for continuously reviewing the suitability of the products specified for the system, referencing the latest catalog, installation manual, Safety Precautions and all materials related to the product.

2. EMERGENCY SHUTOFF
Proportion, Inc. products cannot be used as an emergency shutoff. A redundant safety system should be installed in the system to prevent serious injury or loss of life.

3. EXPLOSIVE ATMOSPHERES
Products and equipment should not be used where harmful, corrosive or explosive materials or gases are present. Unless certified, Proportion-Air, Inc. products cannot be used with flammable gases or in hazardous environments.

4. AIR QUALITY
Clean, dry air is not required for Proportion-Air, Inc. products. However, a 40 micron particulate filter is recommended to prevent solid contamination from entering the product.

5. TEMPERATURE
Products should be used with a media and ambient environment inside of the specified temperature range of 32°F to 158°F. Consult factory for expanded temperature ranges.

6. OPERATION
Only trained and certified personnel should operate electronic and pneumatic machinery and equipment. Electronics and pneumatics are very dangerous when handled incorrectly. All industry standard safety guidelines should be observed.

7. SERVICE AND MAINTENANCE
Service and maintenance of machinery and equipment should only be handled by trained and experienced operators. Inspection should only be performed after safety has been confirmed. Ensure all supply pressure has been exhausted and residual energy (compressed gas, springs, gravity, etc.) has been released in the entire system prior to removing equipment for service or maintenance.

CAUTION

Improper operation could result in serious injury to people or damage to equipment!

1. PNEUMATIC CONNECTION
All pipes, pneumatic hose and tubing should be free of all contamination, debris and chips prior to installation. Flush pipes with compressed air to remove any loose particles.

2. THREAD SEALANT
To prevent product contamination, thread tape is not recommended. Instead, a non-migrating thread sealant is recommended for installation. Apply sealant a couple threads from the end of the pipe thread to prevent contamination.

3. ELECTRICAL CONNECTION
To prevent electronic damage, all electrical specifications should be reviewed and all electrical connections should be verified prior to operation.

EXEMPTION FROM LIABILITY

1. Proportion-Air, Inc. is exempted from any damages resulting from any operations not contained within the catalogs and/or instruction manuals and operations outside the range of its product specifications.
2. Proportion-Air, Inc. is exempted from any damage or loss whatsoever caused by malfunctions of its products when combined with other devices or software.
3. Proportion-Air, Inc. and its employees shall be exempted from any damage or loss resulting from earthquakes, fire, third person actions, accidents, intentional or unintentional operator error, product misapplication or irregular operating conditions.
4. Proportion-Air, Inc. and its employees shall be exempted from any damage or loss, either direct or indirect, including consequential damage or loss, claims, proceedings, demands, costs, expenses, judgments, awards, loss of profits or loss of chance and any other liability whatsoever including legal expenses and costs, which may be suffered or incurred, whether in tort (including negligence), contract, breach of statutory duty, equity or otherwise.

WARRANTY

Proportion-Air, Inc. products are warranted to the original purchaser only against defects in material or workmanship for eighteen (18) months from the date of manufacture. The extent of Proportion-Air's liability under this warranty is limited to repair or replacement of the defective unit at Proportion-Air's option. Proportion-Air shall have no liability under this warranty where improper installation or filtration occurred.

ProportionAir.com
8250 N 600 W
P.O. Box 218
McCordsville, IN 46055
info@proportionair.com

Handcrafted in the USA
ISO 9001-2015 Certified